REV.	DATE	ECN NO.	MODIFICATION	APPROVER
A	2013/05/02	/	NEW	Vicky

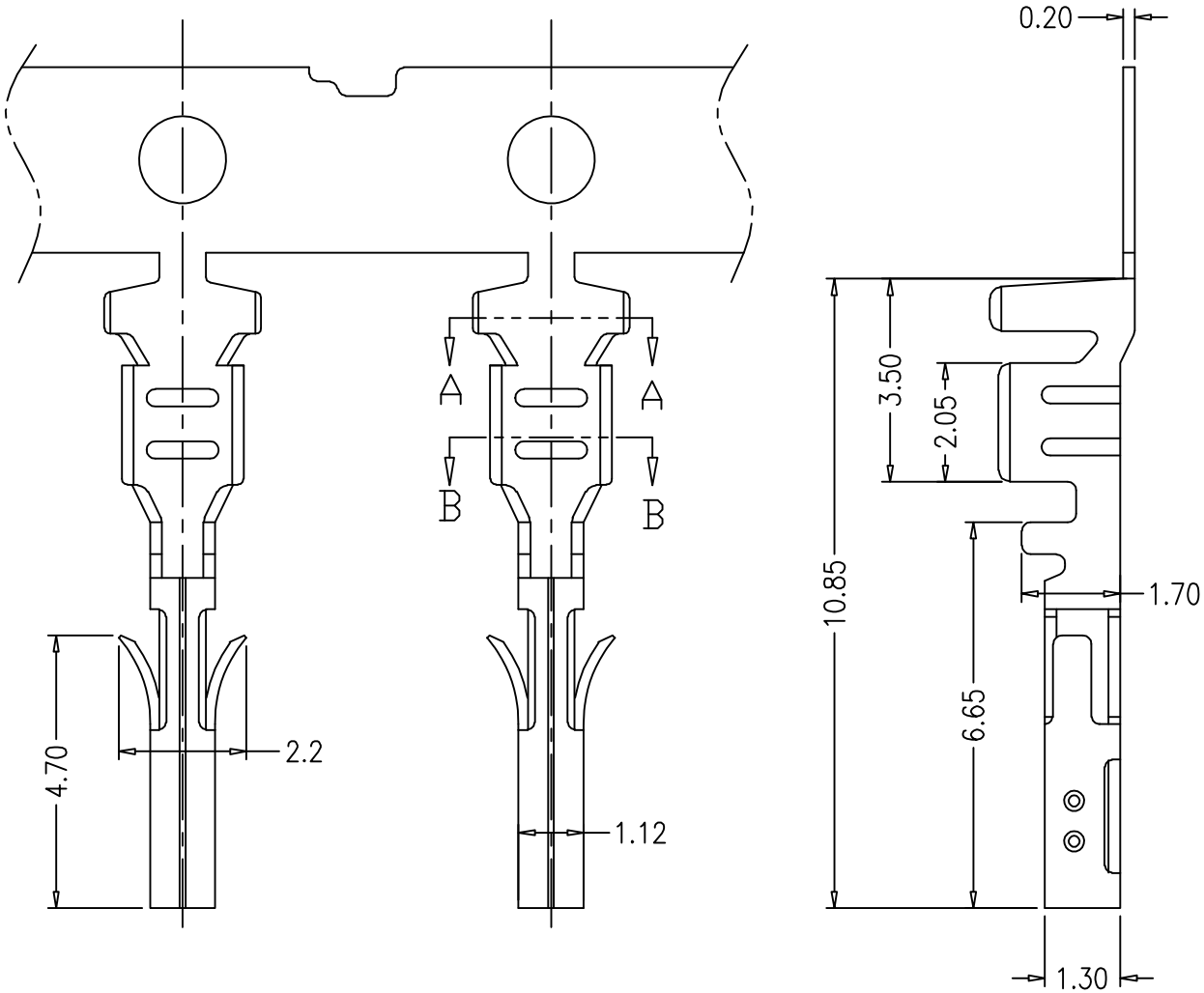

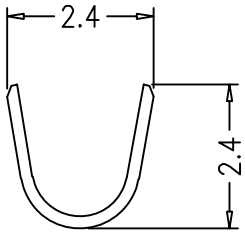

SEC A-A

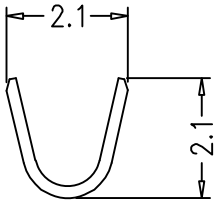

SEC B-B

NOTES:
1.Dim TO Be Checked By QC
2.Along any Portion of strip,Max Allowable Camber is 0.04mm Per 1000mm Length.And MAX.Allowable Twist is 45°Per 1000mm Length
3.All Comers and Radll have a maximum Radius of 0.1mm unless Otherwise Specified

GENERAL TOLERANCE			
SELECT	✓		
DIM. \ TOL.	1	2	3
X.XXX	±0.08	±0.05	±0.15
X.XX	±0.15	±0.13	±0.25
X.X	±0.20	±0.25	±0.50
X.	±0.25	±0.38	±1.00
ANGLE	±2°		

UNITS mm
MAT'L
FINISH
Q'TY

NAME: 端子
PART NO: TR30001303
APPD: Vicky
CHKD: Emilia
DR: Doris

ATOM® 深圳市爱特姆科技有限公司 SHENZHEN ATOM TECHNOLOGY CO.,LTD.

TITLE: 3.0 铆线 磷铜镀锡 端子 白盘

DWG NO. ATOM-A00008

SCALE	SHEET	REV
1:1	1/1	A