REV	DATE	ECN NO.	MODIFICATION	APPROVER
A	2015/09/28		NEW	JACK

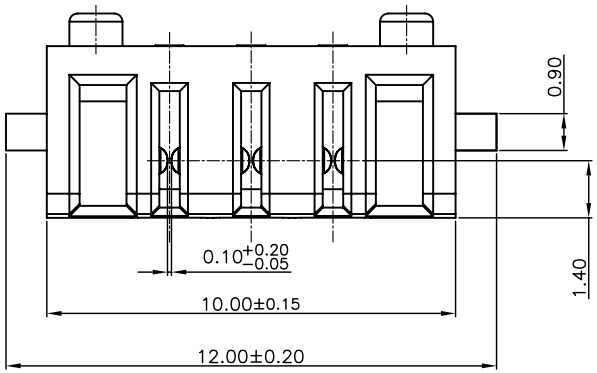

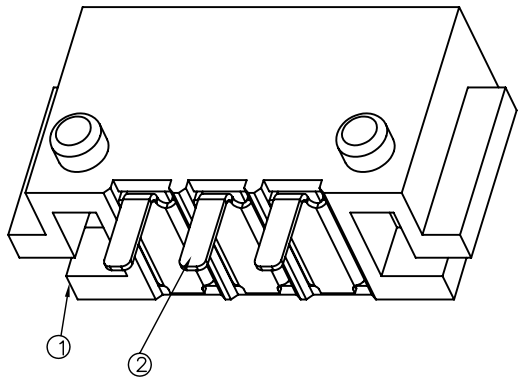

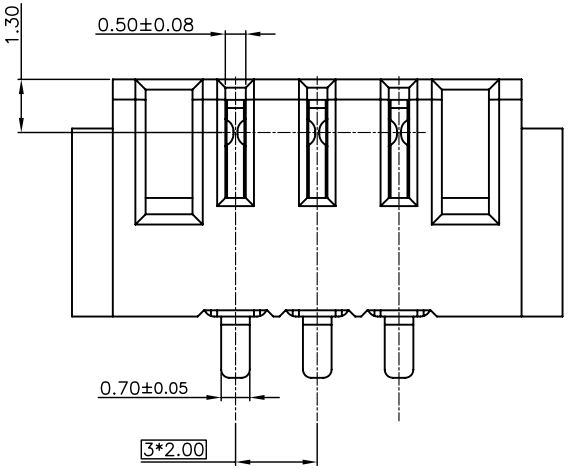

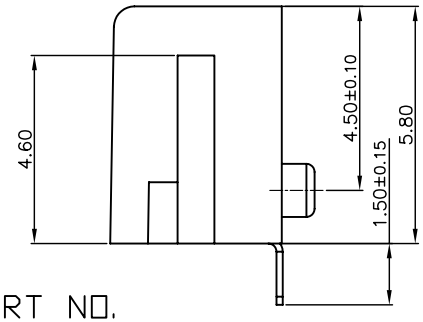

PART NO.

B20003–A420***

- Reserved Number
- PACKAGE
  - 1:PIPE PACKAGE
  - 2:TAPE AND REEL PACKAGE
  - 3:Tray PACKAGE
  - 4:Bag PACKAGE

SPECIFICATION

1. Mechanical performance:
   - 1.1 Insertion and extraction force:0.1~2.0kgf,
   - 2.2 Durability:3000 cycles .
2. Electrical and environment performance
   - 2.1 Current rating:1A
   - 2.2 Voltage rating:8V
   - 2.3 Insulation resistance:100MΩ Min. at 500V DC(After Testing)
   - 2.4 Terminal contact resistance:30mΩ Max.
   - 2.5 Withstanding voltage:500V(r.m.s.)AC at 1mA Max. for one minute
   - 2.6 Operating temperature: −20℃~ +80℃

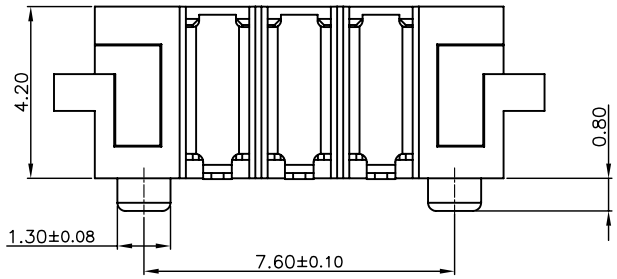

NO.	DESCRIPTION	MATERIAL	COLOR	
2	TERMINAL	COPPER ALLOY		
1	HOUSING	HIGH TEMP. PLASTIC	BLACK	

GENERAL TOLERANCE			
SELECT	✓		
DIM. \ TOL.	1	2	3
X.XXX	±0.10	±0.05	±0.15
X.XX	±0.15	±0.13	±0.25
X.X	±0.20	±0.25	±0.5
X.	±0.30	±0.38	±1.00
ANGLE	±2°		

UNITS mm

MAT'L

FINISH

Q'TY

NAME: BATTERY 3P

PART NO: BA20003–A420*00

APPD:

CHKD:

DR: JACK

ATOM® 深圳市爱特姆科技有限公司 SHENZHEN ATOM TECHNOLOGY CO., LTD.

TITLE: BATTERY 2.0mm 3P SMT H=4.2mm

DWG NO. ATOM–A02738

SCALE	SHEET	REV
1:1	1/1	A0