REV.	DATE	ECN NO.	MODIFICATION	APPROVER
A	2014/07/07	/	NEW	Vicky
B	2019/04/16	RD00319041602	外壳增加凹点	Jason

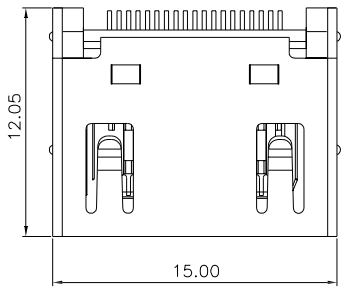

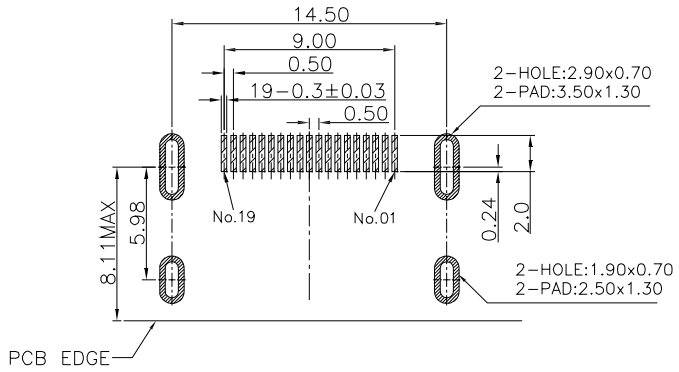

P.C.B LAYOUT

REFERENCE TOLERANCE:±0.05

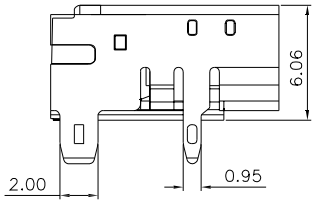

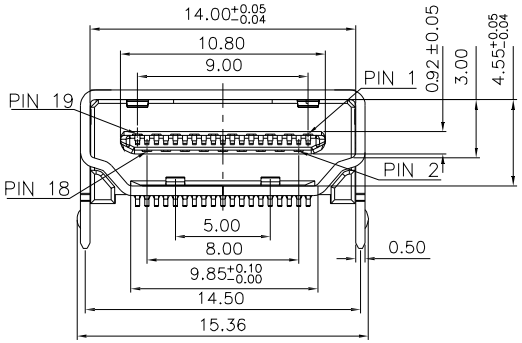

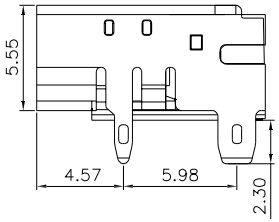

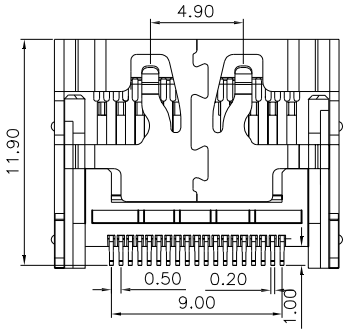

NOTES:

1.) MATERIAL:
- 1-1. HOUSING:THERMOPLASTIC,UL 94V-0,COLOR:BLACK;
- 1-2. CONTACT:COPPER ALLOY,Au PLATED ON CONTACT, MATTE TIN PLATED;
- 1-3. SHELL:COPPER ALLOY,Ni PLATING;

2.) SPECIFICATIONS:
- 2-1. VOLTAGE RATING: 40V
- 2-2. CURRENT RATING: 0.5A
- 2-3. INSULATION RESISTANCE: 100MΩ MIN
- 2-4. CONTACT RESISTANCE: 30mΩ MAX
- 2-5. OPERATION TEMPERATURE: -20° TO +85°

GENERAL TOLERANCE			
SELECT	✓		
TOL. / ON.	1	2	3
X.XXX	±0.05	±0.05	±0.15
X.XX	±0.15	±0.13	±0.25
X.X	±0.20	±0.25	±0.50
X.	±0.30	±0.38	±1.00
ANGLE	±2°		

UNITS mm

MAT'L

FINISH

Q'TY

NAME: HDMI

PART NO: HD119F-3A04205

APPD: Jason

CHKD: Vicky

DR: Cmy

ATOM® 深圳市爱特姆科技有限公司 SHENZHEN ATOM TECHNOLOGY CO., LTD.

TITLE: HDMI 19P/F SMT 外壳 DIP 90° 无耳有卡点(Customer drawing)

DWG NO. ATOM-A03623

SCALE	SHEET	REV
1:1	1/1	B