| PIN | 2P | 3P | 4P | 5P | 6P | 7P | 8P | 9P | 10P | 11P | 12P | 13P | 14P | 15P | 16P |
|---|---|---|---|---|---|---|---|---|---|---|---|---|---|---|---|
| DIM.A | 2.0 | 4.0 | 6.0 | 8.0 | 10.0 | 12.0 | 14.0 | 16.0 | 18.0 | 20.0 | 22.0 | 24.0 | 26.0 | 28.0 | 30.0 |
| DIM.B | 4.6 | 6.6 | 8.6 | 10.6 | 12.6 | 14.6 | 16.6 | 18.6 | 20.6 | 22.6 | 24.6 | 26.6 | 28.6 | 30.6 | 32.6 |
| DIM.C | 0.6 | 1.3 | 3.3 | 5.3 | 7.3 | 9.3 | 11.3 | 13.3 | 15.3 | 17.3 | 19.3 | 21.3 | 23.3 | 25.3 | 27.3 |

| REV. | DATE | ECN NO. | MODIFICATION | APPROVER |
|---|---|---|---|---|
| A | 2013/05/18 | / | NEW | Vicky |

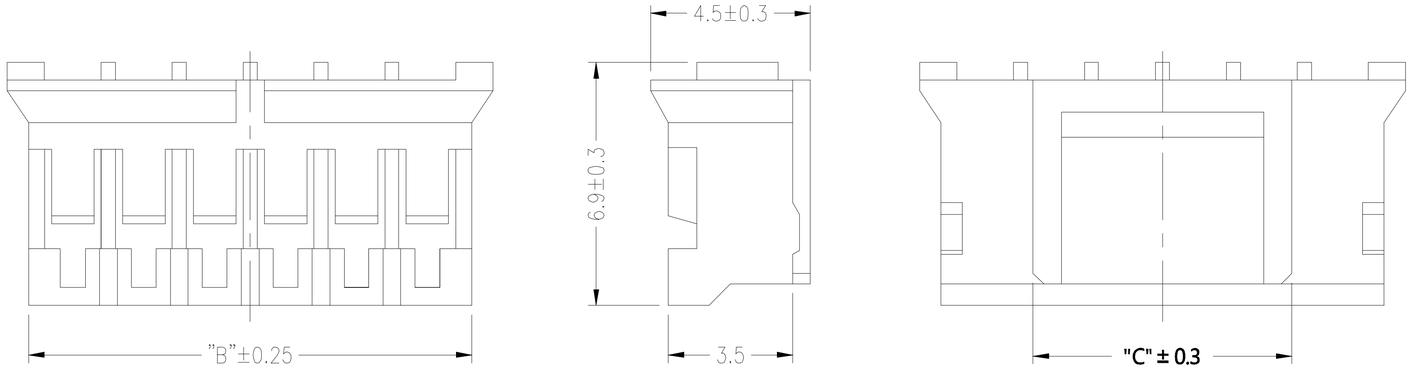


4–16P

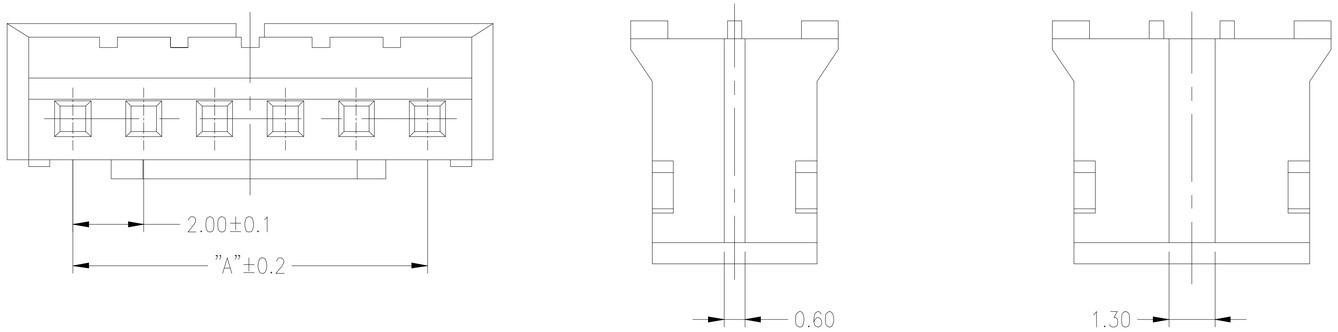


2P 3P

SPECIFICATIONS

Applicable Wire: AWG#30~#24

Rated voltage: 100V DC,AC(rms)

Rated Current: 2A (AWG #24)

Withstand voltage: 800V AC/min.

Working Temp : −25℃ ~ +85℃

Insulation resistance: ⩾1000 MΩ

Contact resistance: ≤10 mΩ

MATERIAL

Insulator: Nylon66, UL94−V2

| GENERAL TOLERANCE | | | |
|---|---|---|---|
| SELECT | ✓ | | |
| TOL. / ON. | 1 | 2 | 3 |
| X.XXX | | ±0.05 | ±0.15 |
| X.XX | ±0.15 | ±0.13 | ±0.25 |
| X.X | ±0.25 | ±0.25 | ±0.50 |
| X. | ±0.30 | ±0.38 | ±1.00 |
| ANGLE | ±2° | | |

UNITS mm

MAT'L

FINISH

Q'TY

NAME: HOUSING

PART NO: H0200**−01***

APPD: Vicky

CHKD: Doris

DR: Cmy

ATOM® 深圳市爱特姆科技有限公司 SHENZHEN ATOM TECHNOLOGY CO.,LTD.

TITLE: HOUSING 2.0 XP PA66 白色 胶芯

DWG NO. ATOM−A02853

| SCALE | SHEET | REV |
|---|---|---|
| 1:1 | 1/1 | A |