REV.	DATE	ECN NO.	MODIFICATION	APPROVER
A	2011/04/11	/	NEW	Vicky

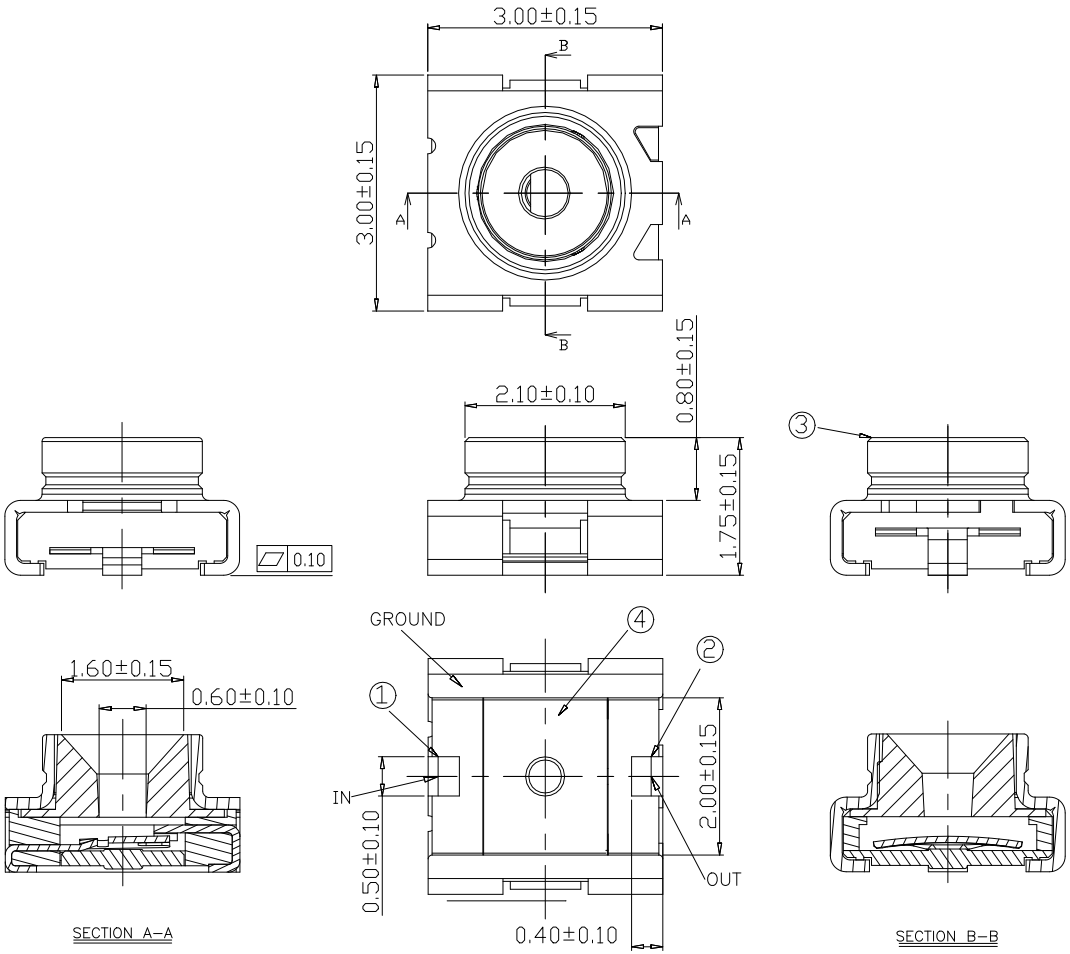

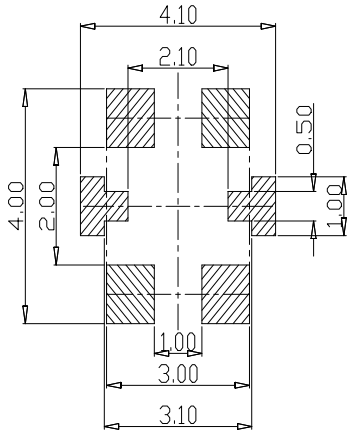

RECOMEND PCB LAYOUT
(General Tolerance:±0.05)

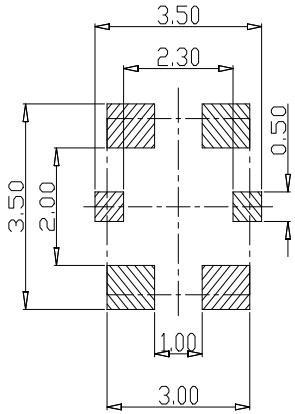

The standard solder stincil mask pattrn
(Mask thicess 0.15mm)

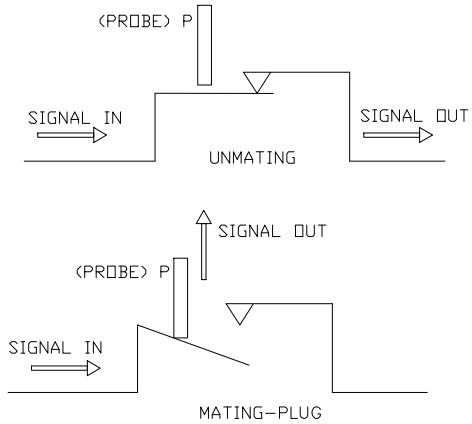

No.	Part Name	Material	Finish	Q'ty
4	Case	Engineering plastic	UL 94V–0,BLACK	1
3	Output teminnal	Copper Alloy	Ni Overall,Contact Area Au ,Soldering Area Gold Flash	1
2	Input terminal(R)	Copper Alloy	Ni Overall,Contact Area Au ,Soldering Area Gold Flash	1
1	Input terminal(C)	Stainless Steel	Ni Overall,Contact Area Au ,Soldering Area Gold Flash	1

GENERAL TOLERANCE			
SELECTION / TOL.	1	2	3
X.XXX	±0.05	±0.05	±0.15
X.XX	±0.10	±0.13	±0.25
X.X	±0.20	±0.25	±0.50
X.	±0.30	±0.38	±1.00
ANGLE	±2°		

UNITS mm
MAT'L
FINISH
Q'TY

NAME: MMCX
PART NO: MXC3F2007
APPD: Vicky
CHKD: Emilia
DR: Doris

ATOM® 深圳市爱特姆科技有限公司 SHENZHEN ATOM TECHNOLOGY CO., LTD.

TITLE: MINI RF I H=1.75mm SMT 镀金

DWG NO. ATOM–A02125

SCALE	SHEET	REV
1:1	1/1	A