REV.	DATE	ECN NO.	MODIFICATION	APPROVER
A	2013/03/11	/	NEW	Vicky

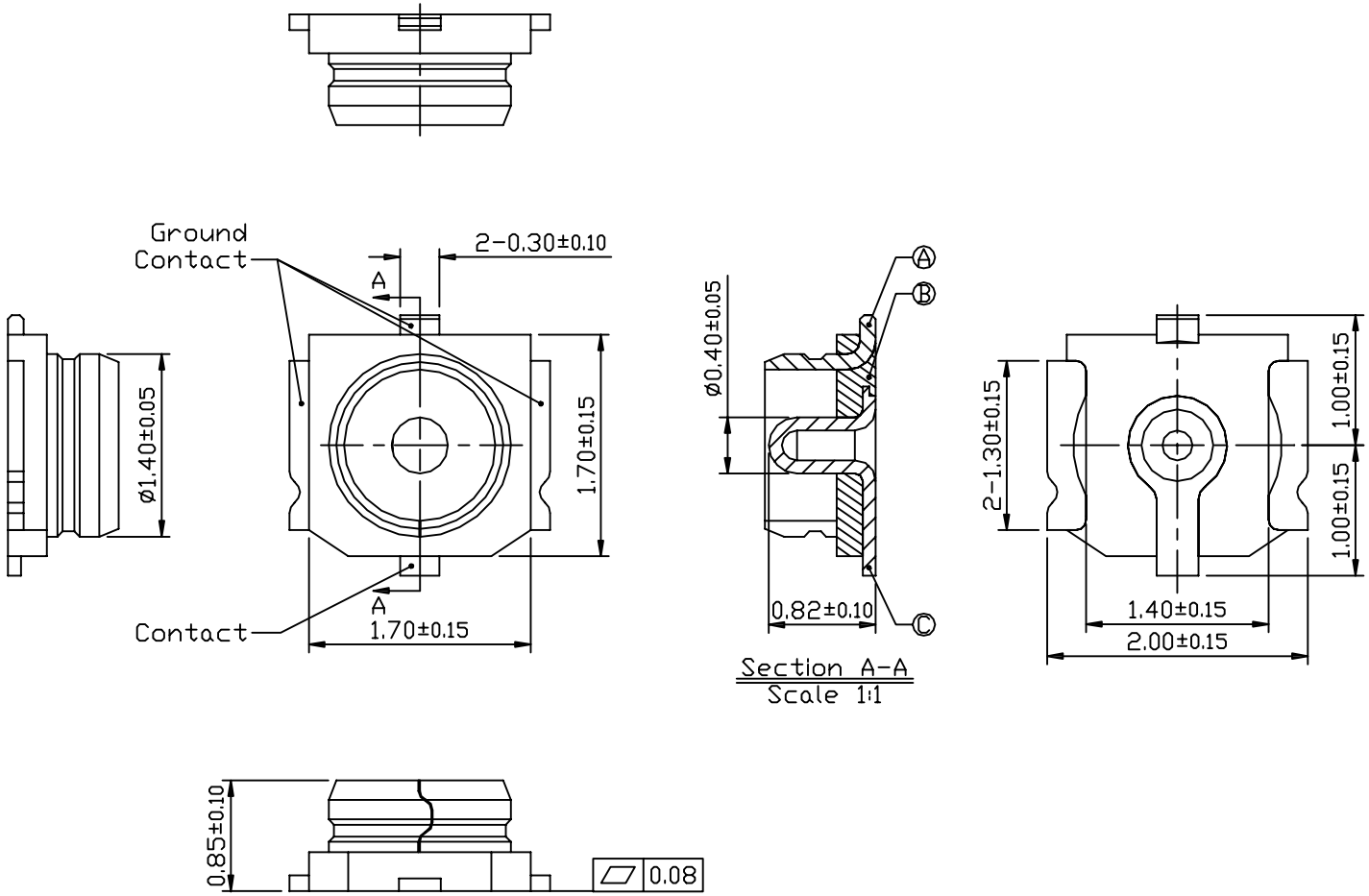

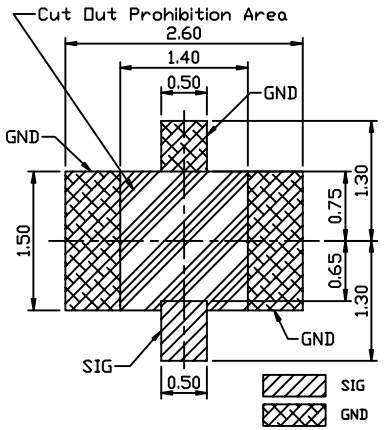

STANDARD P.C.B. LAYOUT
TOP VIEW(TOLERANCE:±0.05)

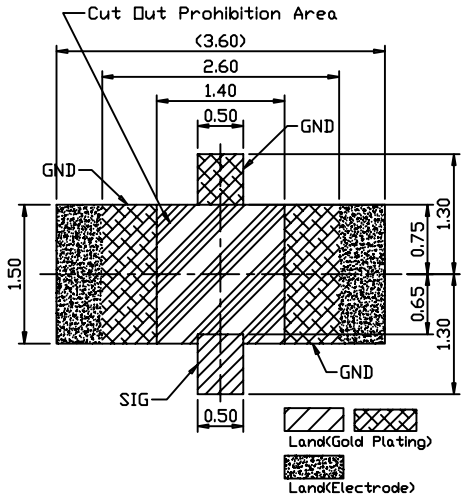

RECOMMENDED LAND PATTERN
TOP VIEW(TOLERANCE:±0.05)

ITEM	PART NAME	Q'TY	MATERIAL/FINISH
Ⓒ	CONTACT	1	COPPER ALLOY/GOLD PLATED OVER Ni
Ⓑ	HOUSING	1	HIGHT TEMP. PLASTIC UL94V-0/BLACK
Ⓐ	SHELL	1	COPPER ALLOY/GOLD PLATED OVER Ni

GENERAL TOLERANCE			
SELECT ON: TOL.	1	2	3
X.XXX	±0.05	±0.05	±0.15
X.XX	±0.10	±0.13	±0.25
X.X	±0.25	±0.25	±0.50
X.	±0.30	±0.38	±1.00
ANGLE	±2°		

UNITS mm
MAT'L
FINISH
Q'TY

NAME: MMCX
PART NO: MXC3F2003
APPD: Vicky
CHKD: Emilia
DR: Linda

ATOM® 深圳市爱特姆科技有限公司 SHENZHEN ATOM TECHNOLOGY CO.,LTD.

TITLE: MINI RF III H=0.85mm SMT

DWG NO. ATOM-A00481

SCALE	SHEET	REV
1:1	1/1	A