REV.	DATE	ECN NO.	MODIFICATION	APPROVER
A0	2020.03.08	/	NEW	Jason

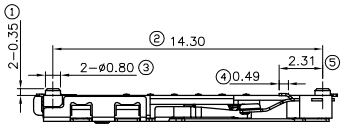

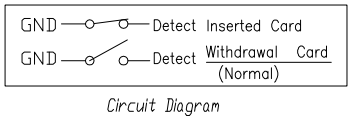

Circuit Diagram

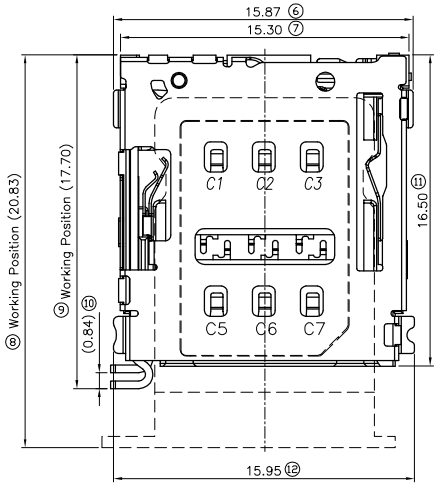

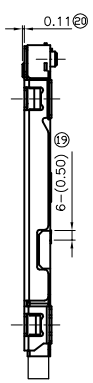

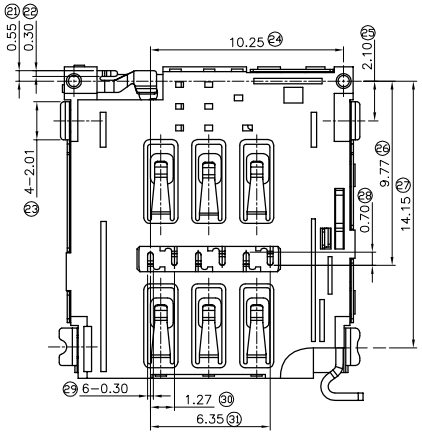

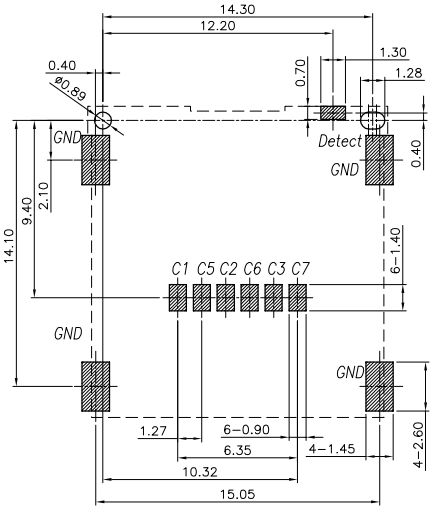

RECOMMENDED PCB LAYOUT
GENERAL TOLERANCE ±0.05

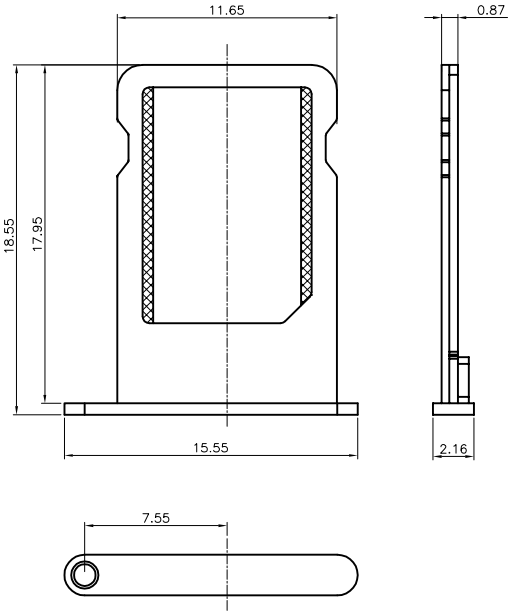

P/N: 1050808AR014
NANO SIM CARD 6P 1.5H卡托

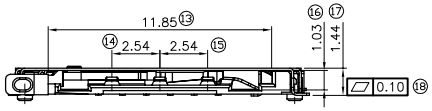

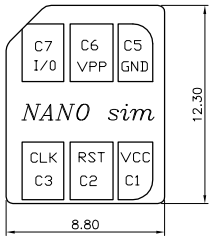

NANO SIM CARD

NOTE:
MATERIAL:
1. Housing: Thermoplastic UL94V-0, Color: Black
2. Contact: Copper Alloy
3. Shell:Copper Alloy

PLATING:
1. Contact: Gold Plated on Contact Area,
   Gold Plated on solder area
   Nickel Under Plated
2. Shell:Gold plated on Solder tail Ni under plated.

SPECIFICATION:
1. Current: 0.5A
2. Withstanding Voltage: 500V AC
3. Contact Resistance: 100 mΩ max.
4. Insulation Resistance: 1000 MΩ min.
5. Temperature Range: -40°C to +85°C
6. Life:5000cycles.

LEAD FREE AND ROHS COMPLIANT PRODUCT

SIM pin Assignment	
PIN#	Name
C1	VCC
C2	RST
C3	CLK
C5	GND
C6	VPP
C7	I/O

GENERAL TOLERANCE			
SELECT		✓	
TOL. / ON.	1	2	3
X.XXX	±0.10	±0.15	±0.20
X.XX	±0.15	±0.20	±0.25
X.X	±0.20	±0.25	±0.30
X.	±0.25	±0.30	±0.50
ANGLE	±2°		

UNITS mm
MAT'L
FINISH
Q'TY

NAME(INTENDED USE): NANO SIM CARD
PART NO.(INTENDED USE): SI106C-08200
APPD: Jason
CHKD: TOM
DR: MING 2020.03.08

ATOM® 深圳市爱特姆科技有限公司
SHENZHEN ATOM TECHNOLOGY CO., LTD.

TITLE: Customer Drawing For NANO SIM CARD 6P SMT H=1.50 [illegible]
DWG NO.: ATOM-A06338

SCALE	SHEET	REV.
1:1	1/1	A0