REV.	DATE	ECN NO.	MODIFICATION	APPROVER
A	2011/09/13	/	NEW	Vicky

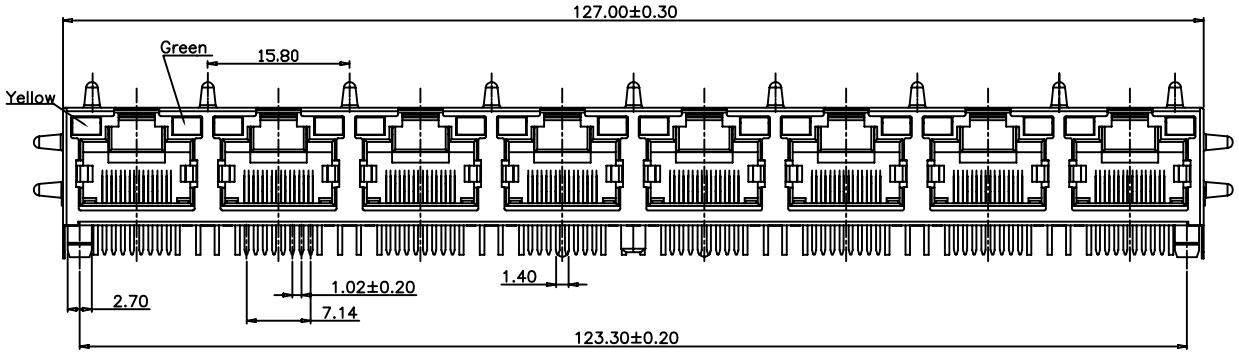

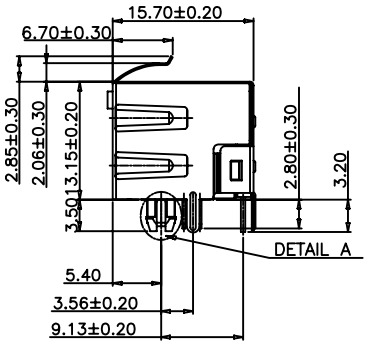

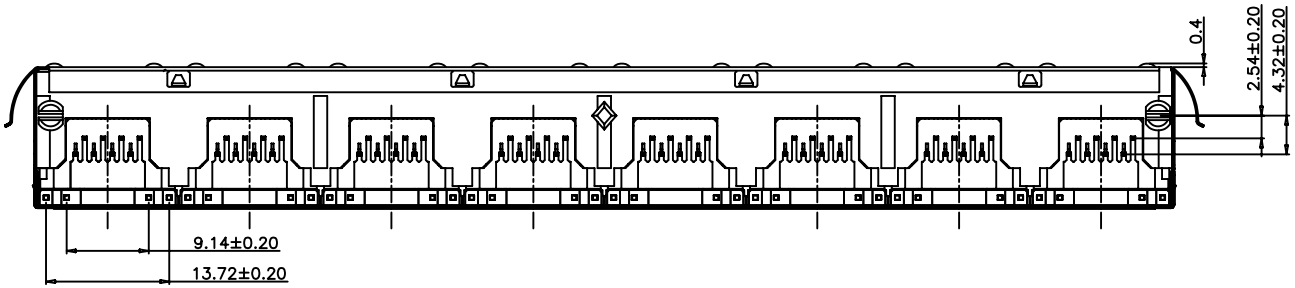

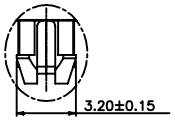

DETAIL A
SCALE 2

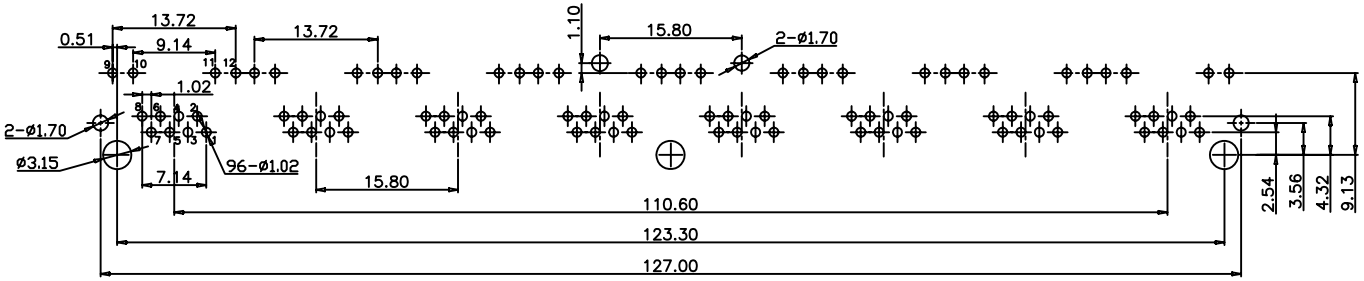

RECOMMENDED P.C.B LAYOUT
TOP VIEW (COMPONENT SIDE)
TOLERENCE±0.05

MATERIALS:
1.Housing:Glass Filled PA46 BLACK
2.Insert:Glass Filled PBT UL94V-0
3.Shielding: Thickness Copper Alloy with Nickel Plated.
4.Contact: Phosphor Bronze Gold Plating over Nickel.
5.Led1:Yellow.
6.Led2:Green

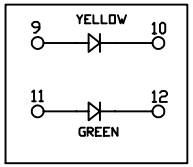

GENERAL TOLERANCE			
SELECT ON:	TOL. 1	2	3
X.XXX	±0.15	±0.05	±0.15
X.XX	±0.25	±0.13	±0.25
X.X	±0.35	±0.25	±0.50
X.		±0.38	±1.00
ANGLE	±3°		

UNITS mm
MAT'L
FINISH
Q'TY

NAME: JACK
PART NO: RJ450072300
APPD: Vicky
CHKD: Doris
DR: Dasiy

ATOM® 深圳市爱特姆科技有限公司 SHENZHEN ATOM TECHNOLOGY CO.,LTD.
TITLE: RJ45 1*8 5631-8C-II 带灯带弹
DWG NO. ATOM-A02153

SCALE	SHEET	REV
1:1	1/1	A