REV	DATE	ECN NO.	MODIFICATION	APPROVER
A0	2020/09/15		NEW	Jason_Lee

1. Material:
   1.1 HOUSING:High Temperature thermoplastic,UL94V-0
   1.2 SHELL:Stainless
   1.3 CONTACT:Copper Alloy
2. Plating of Contact
   2.1 CONTACT: 5u" Au IN CONTACT AREA,
   100u" min Sn IN SOLDER TAIL AREA,
   BOTH OVER 30u" min Ni UNDER PLATED OVERALL
   2.2 SHELL:WASH OVER ALL.
3. Mechanical performance
   3.1 Mating Cycles: 5000 cycles
4. Electrical performance:
   4.1 Rating current:1A Max.
   4.2 Insulation resistance: 1000MΩ Min. at 500 V DC.
   4.3 Terminal contact resistance: 100mΩ Max.
   4.4 Withstanding voltage:500V AC at 1mA Max. for 1 minute.
5. Environment performance.
   3.1 Operating temperature: -40℃~ +85℃
6. PRODUCT COMPLIANT TO ROHS AND HALOGEN FREE.

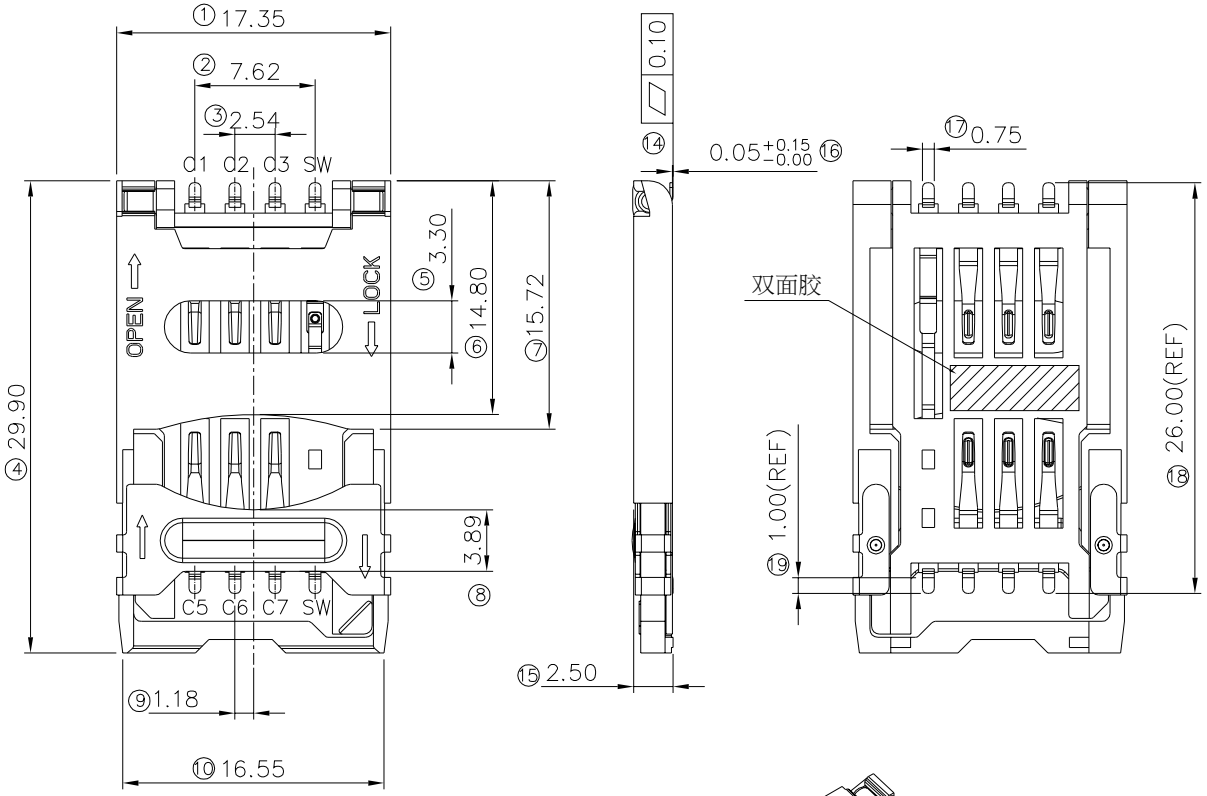

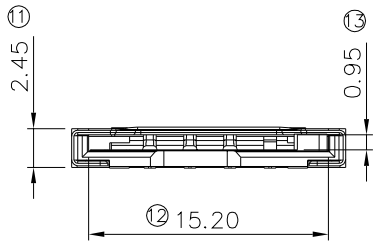

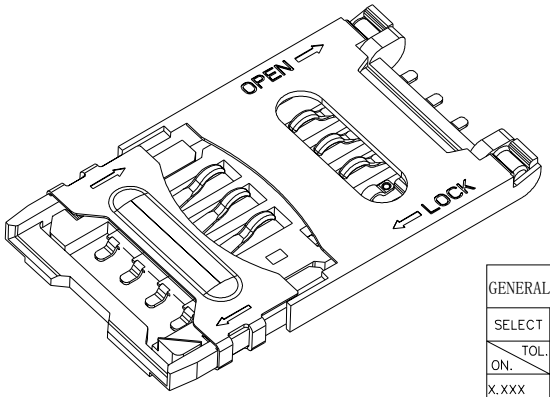

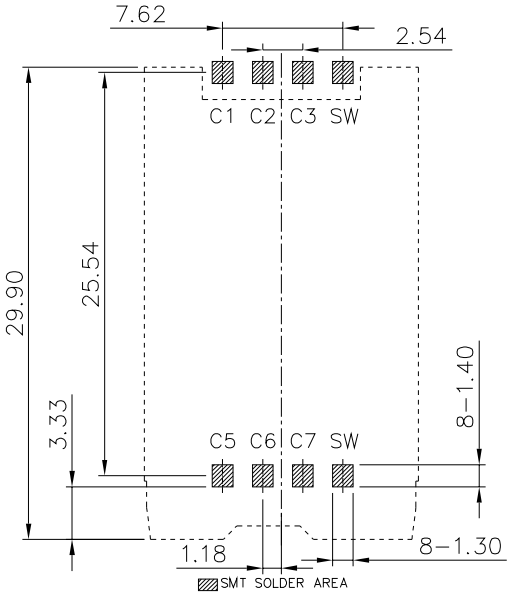

THERE SHOULD NOT BE ANY CIRCUITRIES IN THE LAYOUT SPACE OF THE PRODUCTS

RECOMMENDED PCB LAYOUT

GENERAL TOLERANCE±0.05

ELECTRIC FUNATION	DETECT SWITCH
WITHOUT CARD	OPEN
CARD INSERTED	CLOSED

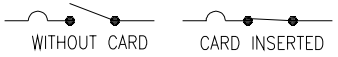

SWITCH OPERATION DIAGRAM

GENERAL TOLERANCE			
SELECT			✓
TOL. / ON.	1	2	3
X.XXX	±0.10	±0.05	±0.15
X.XX	±0.15	±0.13	±0.25
X.X	±0.20	±0.25	±0.5
X.	±0.30	±0.38	±1.00
ANGLE	±2°		

UNITS mm
MAT'L
FINISH
Q'TY

NAME: SIM CARD CONNECTOR

PART NO: SI84C-03202

APPD:

CHKD:

DR: Abel

ATOM® 深圳市爱特姆科技有限公司 SHENZHEN ATOM TECHNOLOGY CO., LTD.

TITLE: SIM CARD 掀盖式H=2.5(背面贴双面胶)

DWG NO. ATOM-A05434

SCALE	SHEET	REV
1:1	1/1	A0