REV.	DATE	ECN NO.	MODIFICATION	APPROVER
A	2010/03/07	/	NEW	MIKE

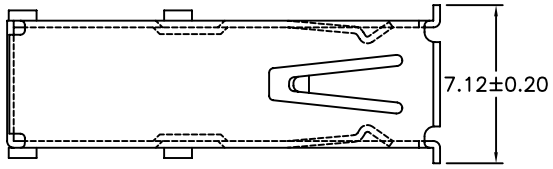

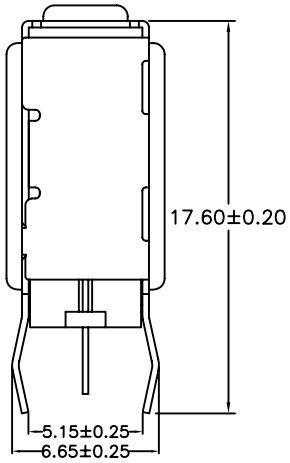

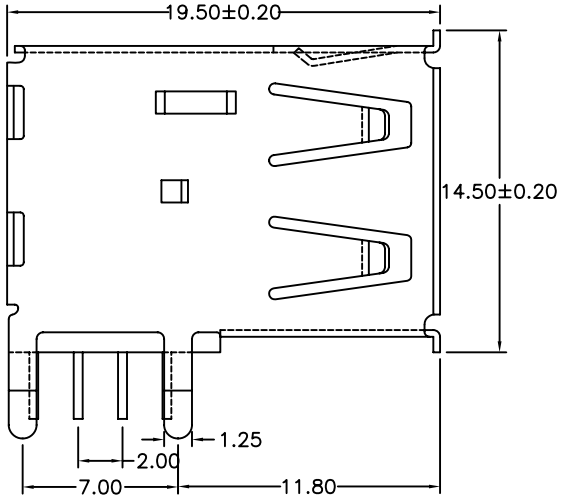

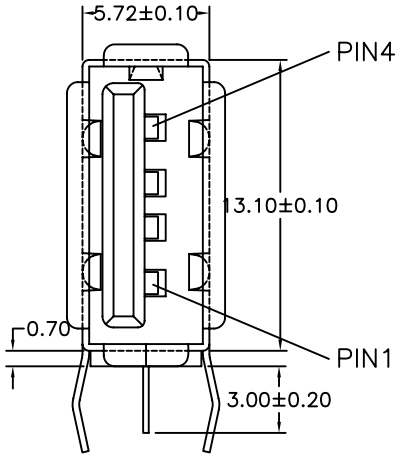

Specifications:

Electrical:

1.Current Rating: 1.5A/contact terminal
2.Voltage Rating: 30V DC
3.Contact Resistance: 30 milliohms MAX
4.Dielectric Withstanding Voltage: 500V AC AT Sea Levol
5.Insulation Resistance: 1000MEGA ohms MIN

Mechanical:

1.Mate Force: 3.75kgf(MAX)
2.Unmate Force: 1.02kgf(MIN)
3.Terminal Retention: 1.2kgf(MIN)

Material:

1.Housing: HIGH TEMP. PLASTIC, UL94V-0 PBT/LCP White/Black
2.Contact: Copper Alloy C2680
3.Shell:C2680/SPCC

Finish:

1.Contact: 1u" Gold in Mating Area; 120u" Tin On Solder Tails
2.Shell: 80u" Nickel Plating

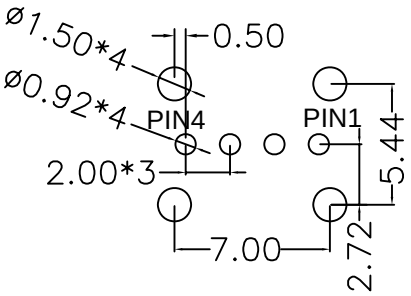

PCB LAYOUT

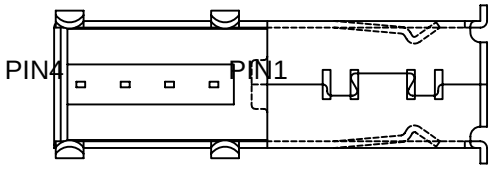

GENERAL TOLERANCE			
SELECT	✓		
TOL. ON:	1	2	3
X.XXX	±0.10	±0.05	±0.15
X.XX	±0.20	±0.13	±0.25
X.X	±0.30	±0.25	±0.50
X.		±0.38	±1.00
ANGLE	±5°		

UNITS mm
MAT'L
FINISH
Q'TY

NAME: USB
PART NO: USB304FA-A1010***
APPD: MIKE
CHKD: Vicky
DR: Anna

ATOM® 深圳市爱特姆科技有限公司 SHENZHEN ATOM TECHNOLOGY CO.,LTD.

TITLE: USB A/F DIP 90° 侧插 加后盖

DWG NO. ATOM-A00097

SCALE	SHEET	REV
1:1	1/1	A