REV.	DATE	ECN NO.	MODIFICATION	APPROVER
A	2014/02/23	/	NEW	Vicky
B	2015/02/23	RD00315022301	增加吸取盖图示	Vicky

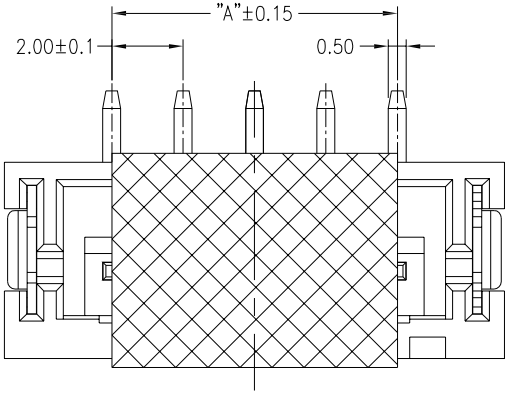

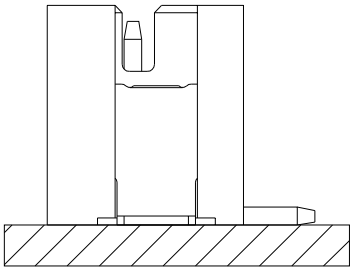

Assembly layout

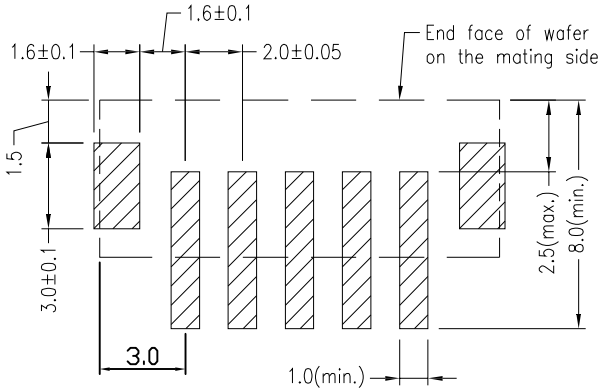

P.C.B LAYOUT

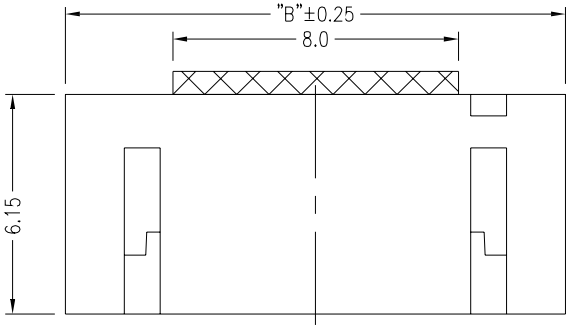

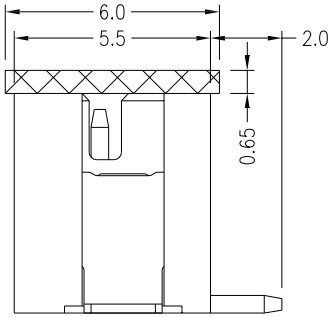

PIN	A	B
2P	2.0	8.0
3P	4.0	10.0
4P	6.0	12.0
5P	8.0	14.0
6P	10.0	16.0
7P	12.0	18.0
8P	14.0	20.0
9P	16.0	22.0
10P	18.0	24.0
11P	20.0	26.0
12P	22.0	28.0
13P	24.0	30.0
14P	26.0	32.0
15P	28.0	34.0
16P	30.0	36.0

SPECIFICATIONS
Applicable: AWG#30~#24
Voltage rating: AC,DC,250V(rms)
Current rating: 2.0A,AC,DC
Withstand voltage: 800V AC/minute
Working Temperature: −25℃~+85℃
Insulation resistance: ⩾1000MΩ
Contact resistance: ≤20mΩ
MATERIAL
Insulator: Thermoplatic,UL94V−0
Pin: Copper alloy,Tin plated
Solder tab:Copper alloy,Tin plated

GENERAL TOLERANCE			
SELECT	✓		
TOL. ON:	1	2	3
X.XXX		±0.05	±0.15
X.XX	±0.15	±0.13	±0.25
X.X	±0.25	±0.25	±0.50
X.	±0.30	±0.38	±1.00
ANGLE	±2°		

UNITS mm
MAT'L
FINISH
Q'TY

NAME: WF
PART NO: WF200**−02***
APPD: Vicky
CHKD: Doris
DR: Cmy

ATOM® 深圳市爱特姆科技有限公司 SHENZHEN ATOM TECHNOLOGY CO., LTD.
TITLE: Wafer2.0mm XP SMT 立贴
DWG NO. ATOM−A00764

SCALE	SHEET	REV
1:1	1/1	B